CAN YOU SEE THE AIRPLANES? THE ADJACENT SAMPLES SHOW THREE DIFFERENT LEVELS OF SHADING. SETTINGS FOR VIEWING AND PRINTING DRAWING CONTENT ARE OPTIMIZED WHEN ALL THREE PLANES ARE VISIBLE. THIS GUIDANCE IS PROVIDED FOR REFERENCE ONLY.

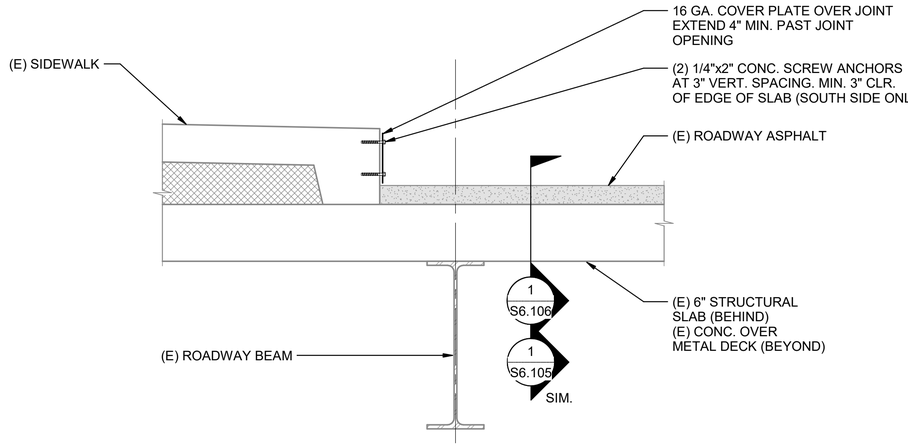

BEHIND/BEYOND JOINT

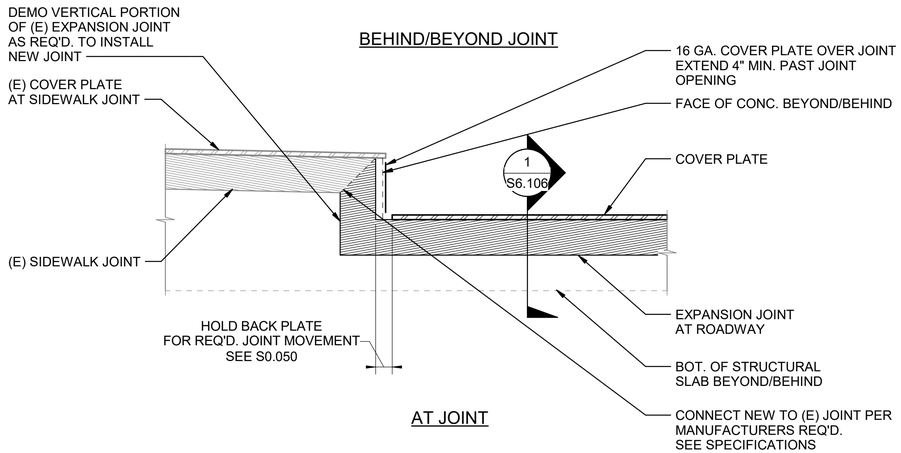

AT JOINT

1 JOINT TIE IN AT CURB
SCALE: 1 1/2" = 1'-0"

DRAWING SCALE IS REDUCED 50% WHEN SHEET SIZE IS 11" x 17".
0 1" 2"
GRAPHIC SCALE-FOR REFERENCE ONLY

NO.	DATE	BY	REVISIONS	APP

NO.	DATE	BY	REVISIONS	APP

Port of Portland

mwa architects
501 SE 14TH AVE., SUITE 103
PORTLAND, OR 97214
P 503.973.5151 - F 503.973.5060

kpff
111 SW Fifth Ave., Suite 2600
Portland, OR 97204
O 503.227.3251 - F 503.227.7980

2025D018 DESIGN NUMBER

102970 PROJECT NUMBER

STRUCTURAL REGISTERED PROFESSIONAL ENGINEER 19608 DIGITALLY SIGNED OREGON NOV. 14, 2008 CRAIG J. TOTTEN
EXPIRES 06-30-26

PORTLAND INTERNATIONAL AIRPORT

TERMINAL UPPER ROADWAY JOINT REPLACEMENT

EXPANSION JOINT DETAILS - 12

SUBMITTED BY	JAY OSTLUND
DESIGN BY	S. THOMAS
DRAWN BY	J. DE BOER
CHECKED BY	C. TOTTEN
DATE	OCTOBER 2026
SHEET NO.	54
TYPE:	CD
DRAWING NO.	PDX 2026-514
DISC. SHT. NO.	S6.122